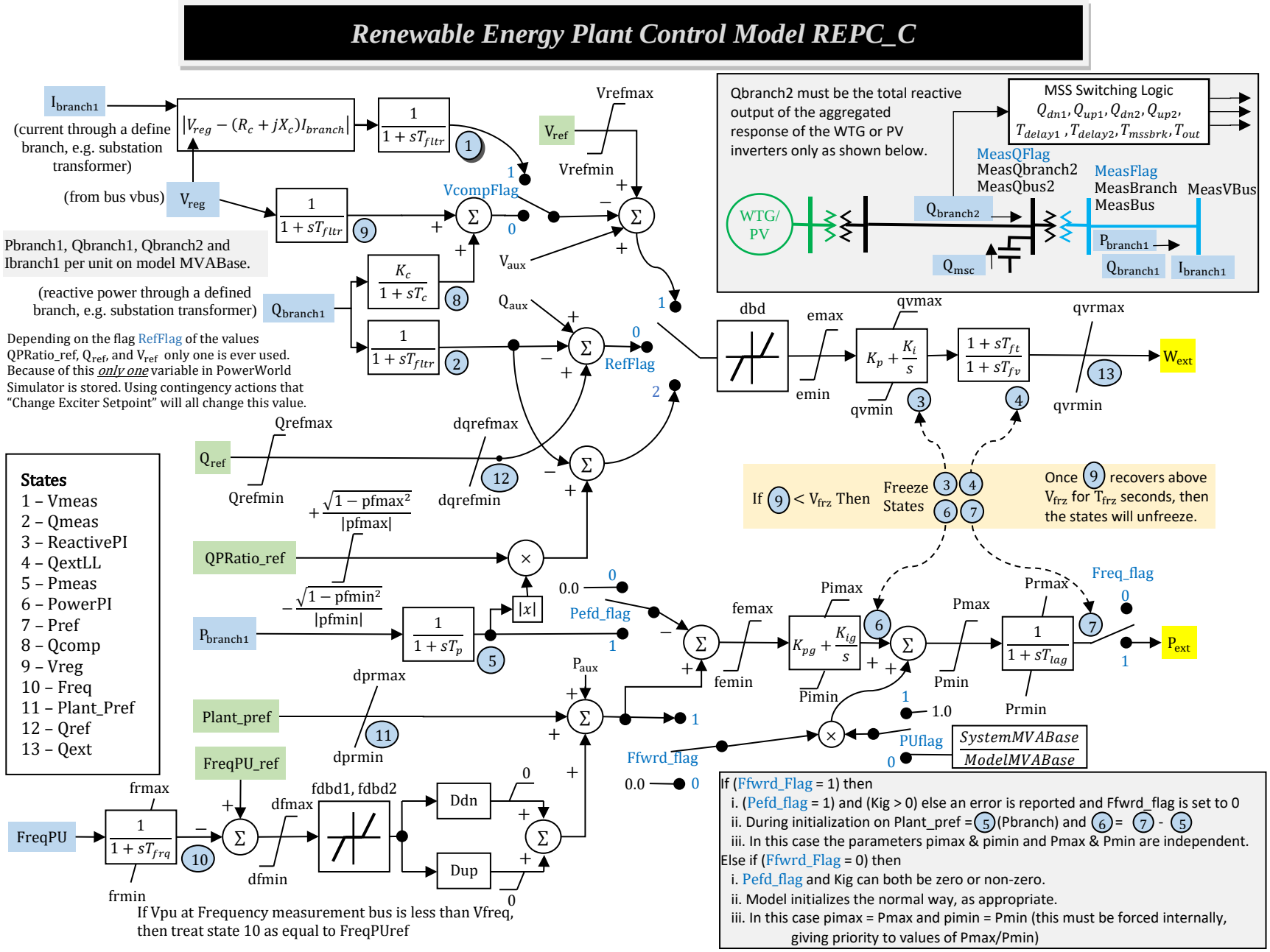Plant Controller REPC_C